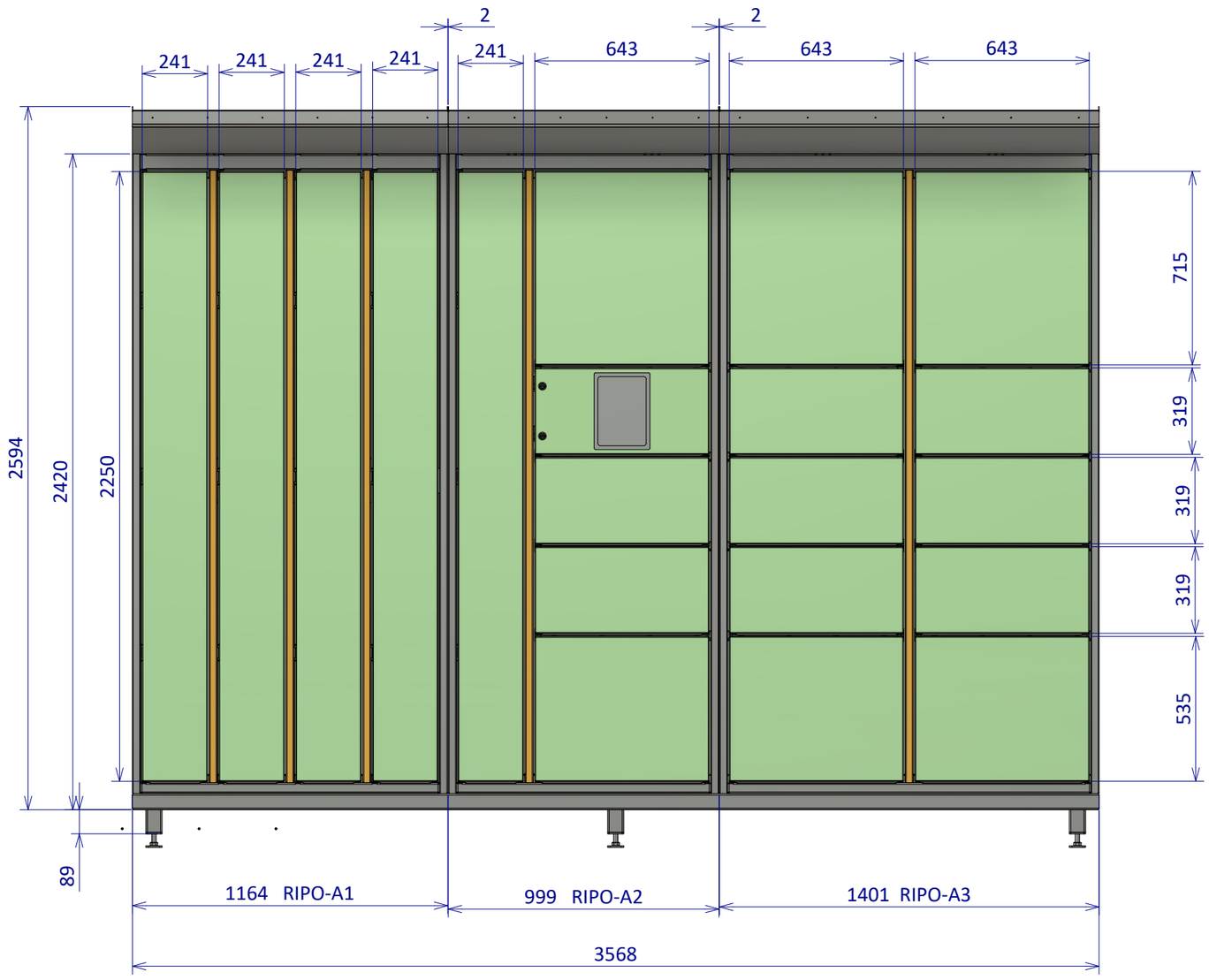

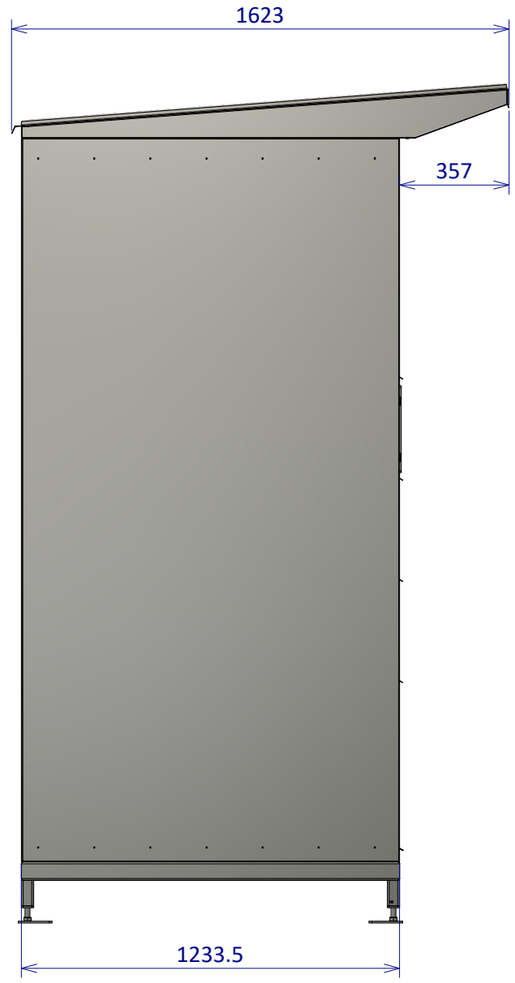

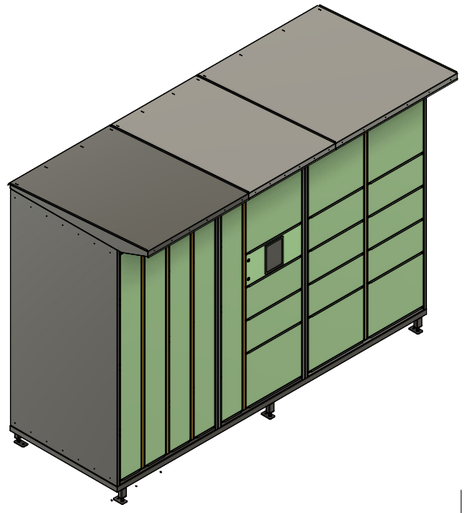

Created by: Gustavs Podnieks	Ordered by: - TC	Material	Thickness	Post-processing	
GP TECH ART		Project Name		Date: 08.07.2025	
		Part nr.: Terminals-RIPO		Model name: Terminals-RIPO	
contact: +371 22479726	contact	Year: 2025	Mass/ Weight: 1260.53 kg	Sheet: A3	Scale / Sheet nr.: 1/3

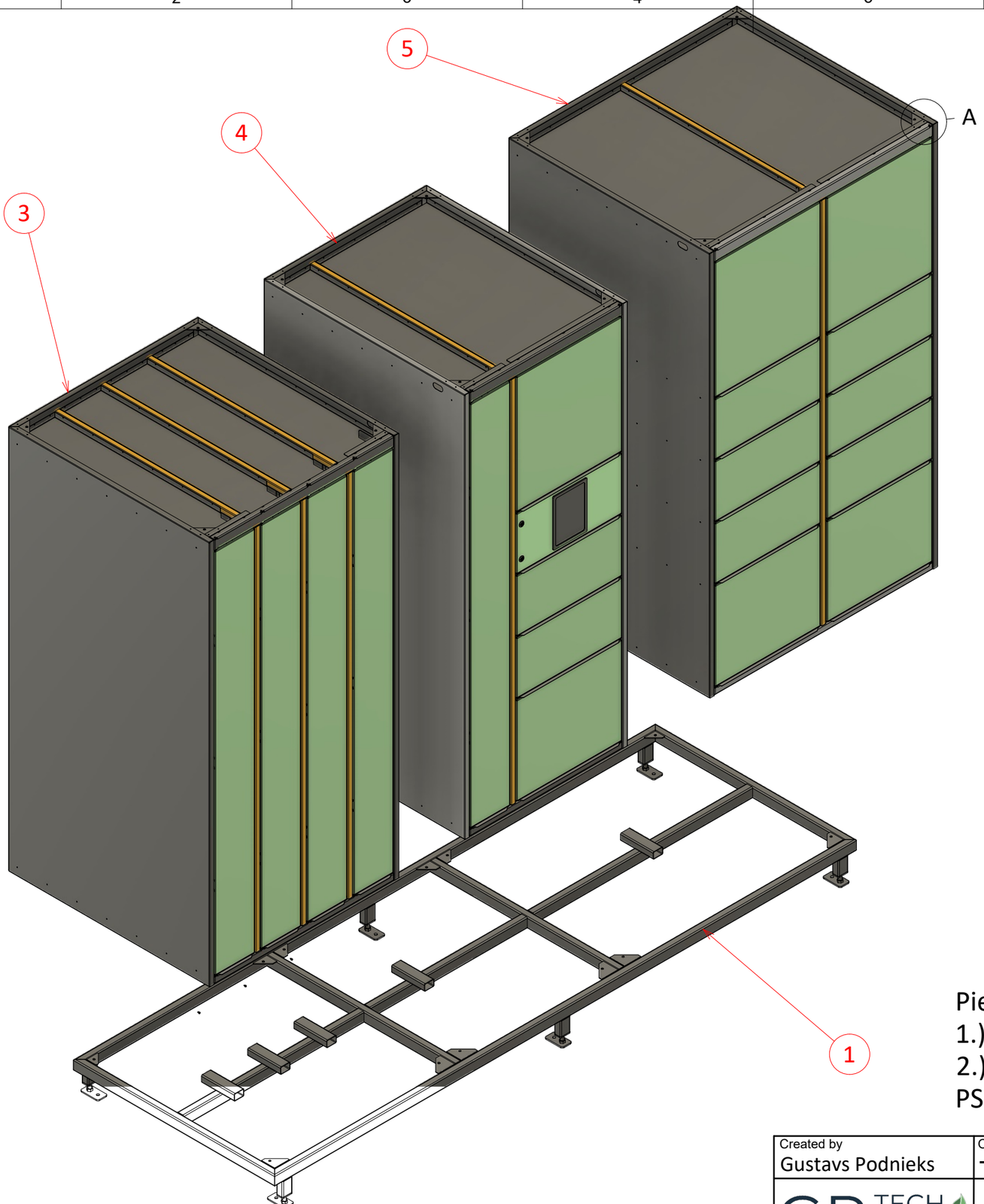

Parts List			
Item	Qty	Part Number	Mass
1	1	Ramis	75.53 kg
3	1	RIPO-A1	414.79 kg
4	1	RIPO-A2	343.05 kg
5	1	RIPO-A3	427.15 kg

A (1:3)

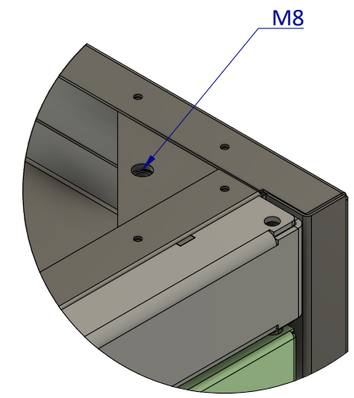

Piezīmes:
1.) Uz rāmja uzcelt Moduļus RIPO-A1, RIPO-A2, RIPO-A3
2.) Pieskrūvēt no apkšas ar M8 skrūvi
PS. Moduļus drīkst celt aiz austiņam Stūros. Griezums A

Created by Gustavs Podnieks	Ordered by - TC	Material	Thickness	Post-processing		
GP TECH ART		Project Name		Date 08.07.2025		
		Part nr. Terminals-RIPO		Model name Terminals-RIPO		
contact +371 22479726	contact	Year 2025	Mass/ Weight 1260.53 kg	Sheet A3	Scale	Sheet nr. 2/3

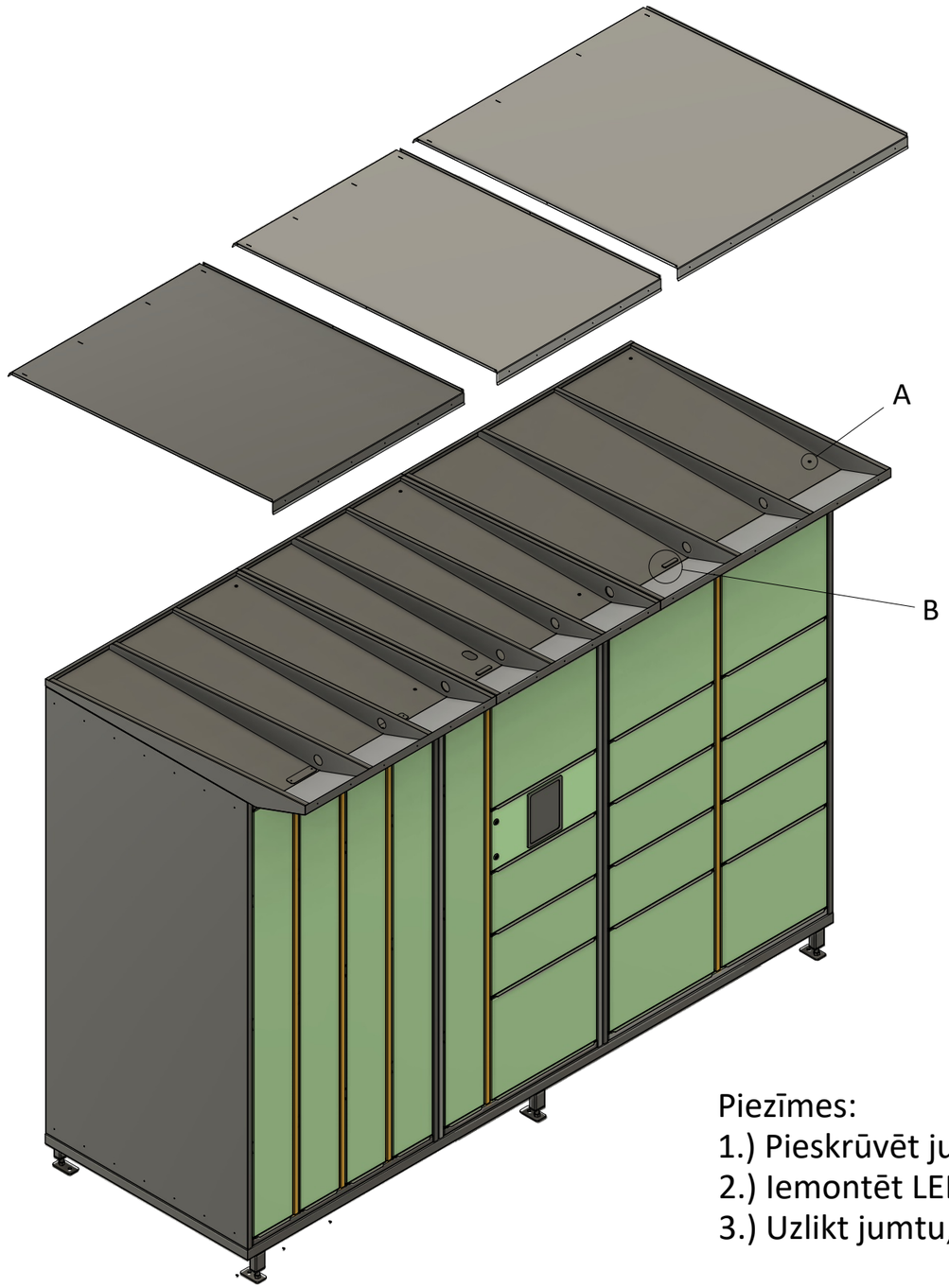

A (1:3)

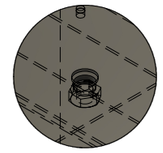

B (1:3)

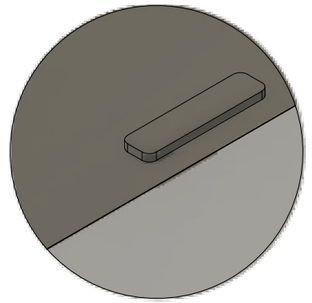

Piezīmes:

1.) Pieskrūvēt jumta detaļas (DIN 933 M8 x 30mm) 4 gab katram jumtam Griezums A

2.) Iemontēt LED Detaļās (karstā līmē vai līdzīgas risinājums) Griezums B

3.) Uzlikt jumtu, piekniedēt (DIN 7337 4x8)

Created by Gustavs Podnieks	Ordered by - TC	Material	Thickness	Post-processing		
GP TECH ART		Project Name		Date 08.07.2025		
		Part nr. Terminals-RIPO		Model name Terminals-RIPO		
contact +371 22479726	contact	Year 2025	Mass/ Weight 1260.53 kg	Sheet A3	Scale	Sheet nr. 3/3